# ORCHARD EQUIPMENT

PERFECT

Symbol of Perfection

rotary mowers

page 2-9

flail choppers

page 10-13

solo-swing

page 14-15

brush sweepers

page 16

## Extra low models • series T

All "Perfect" rotary mowers comply with the highest level of current requirements in modern orchards and vineyards. In order to prevent damage to low hanging branches and fruit our T-models have a low, streamlined profile and round sides.

Either one or two front support wheels and rear rollers give the necessary stability and excellent terrain adjustment. All generously overlapping cutting blades are driven indirectly by means of V-belts, mostly with automatic springloaded belt tensioners. This flexible drive system protects the gearbox from shock loads.

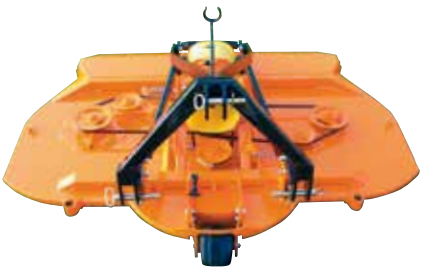

| Technical specifications | | T-155 | T-180 | T-200 | T-225 | T-250 | T-290 |
|---|---|---|---|---|---|---|---|
| Cutting width | cm/inch | 155 / 5'2" | 180 / 5'11" | 200 / 6'7" | 225 / 7'5" | 250 / 8'2" | 290 / 9'6" |
| Min. power required at 540 rpm of pto | kW/hp | 16 / 22 | 18 / 25 | 22 / 30 | 26 / 35 | 29 / 40 | 33 / 45 |
| Number of blades | | 3 | 3 | 3 | 3 | 3 | 3 |
| Total width | cm/inch | 160 / 5'3" | 185 / 6'1" | 205 / 6'9" | 230 / 7'7" | 255 / 8'4" | 295 / 9'8" |
| Cutting height | cm/inch | 4-10 / 1½-4" | 4-10 / 1½-4" | 4-10 / 1½-4" | 4-10 / 1½-4" | 4-10 / 1½-4" | 4-10 / 1½-4" |
| Length of rear roller(s) | cm/inch | (1) 102 / 40" | (2) 38 / 15" | (2) 48 / 19" | (2) 53 / 21" | (2) 53 / 21" | (2) 53 / 21" |
| Weight | kg/lbs | 350 / 770 | 385 / 847 | 415 / 913 | 500 / 1100 | 525 / 1155 | 535 / 1177 |

## Twin gearbox models with side discharge • series RN

Two separate gearboxes rotating in opposite directions drive the two main blades of our RN-mowers. This improves the cutting quality, even in higher grass.

The short central blade is placed in front of the two others which creates a generous overlap, giving a perfect, integral cut without striping. Working very closely behind the tractor and being fitted with front swivels wheels and a conical ended rear roller means the mower can very easily be manoeuvred, even if room is limited, without damaging the turf.

The RN can be delivered with a manual or hydraulic offset device, which allows working closer to the trees while keeping the tractor as central as possible between the tree rows.

| Technical specifications | | RN-180 | RN-200 | RN-225 | RN-250 | RN-290 |
|---|---|---|---|---|---|---|
| Cutting width | cm/inch | 180 / 5'11" | 200 / 6'7" | 225 / 7'5" | 250 / 8'2" | 290 / 9'6" |
| Min. power required at 540 rpm of pto | kW/hp | 18 / 25 | 22 / 30 | 26 / 35 | 29 / 40 | 33 / 45 |
| Number of blades | | 3 | 3 | 3 | 3 | 3 |
| Total width | cm/inch | 185 / 6'1" | 205 / 6'9" | 230 / 7'7" | 255 / 8'4" | 295 / 9'8" |
| Cutting height | cm/inch | 4-10 / 1½-4" | 4-10 / 1½-4" | 4-10 / 1½-4" | 4-10 / 1½-4" | 4-10 / 1½-4" |
| Length of rear roller | cm/inch | 48 / 1'7" | 48 / 1'7" | 48 / 1'7" | 76 / 2'6" | 95 / 3'1" |
| Max. offset from centre of tractor (optional) | cm/inch | 126 / 4'2" | 136 / 4'6" | 148 / 4'10" | 161 / 5'3" | - |
| Weight | kg/lbs | 415 / 913 | 460 / 1014 | 480 / 1056 | 530 / 1166 | 585 / 1287 |

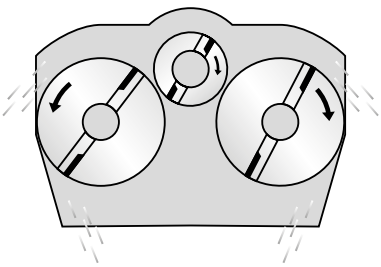

The cut material is evenly distributed behind the machine over its full working width or can, if required, be spread to the left and right hand side of the machine on the tree strips.

## *Compact front rotary mowers • series TKF*

Our TKF rotary mowers are very short, compact and are fitted very closely to the tractor to limit its turning radius at tree- and vine row ends.

They are equipped with four short cutting blades. The two left hand blades turn to the left and the two right hand blades to the right. This provides a clean cut and an excellent distribution of the cut material to the rear, or if desired to the left– and right hand side on the tree strips.

| Technical specifications | | TKF-200 | TKF-230 |
|---|---|---|---|
| Cutting width | cm/inch | 200 / 6'7" | 230 / 7'7" |
| Min. power required at 540 rpm of pto | kW/hp | 34 / 45 | 36 / 50 |
| Number of blades | | 4 | 4 |
| Total width | cm/inch | 205 / 6'9" | 235 / 7'9" |
| Cutting height | cm/inch | 4-10 / 1½-4" | 4-10 / 1½-4" |
| Length of rear roller | cm/inch | 74 / 2'5" | 74 / 2'5" |
| Weight | kg/lbs | 480 / 1058 | 540 / 1190 |

The standard configuration of the front mounted TKF model includes a universal gearbox with overrunning clutch that accepts both clockwise and anti-clockwise rotations of PTO.

A unique headstock allows for fitting extremely close to the tractor front independently of tractor brand and model.

## Skid models • series LF

Our LF-type rotary mower has high long, rounded skids at both sides to allow for working speeds up to 8-10 km/h (= 6-6½ mph).The simple but very sturdy construction of this machine makes it ideal for grass strip maintenance in orchards and vineyards, as well as for maintenance of estates, airfields, parks, camping sites etc.

An optional rear roller with conical ends can be used for extra stability.

Our LF mowers (except LF-140) have a simple offset possibility as standard. A parallelogram-type offset feature (with manual or hydraulic adjustment) is available as an option.

| Technical specifications | | LF-140 | LF-185 | LF-215 | LF-245 | LF-275 | LF-360 |
|---|---|---|---|---|---|---|---|
| Cutting width | cm/inch | 140 / 4'7" | 185 / 6'1" | 215 / 7'1" | 245 / 8'1" | 275 / 9'0" | 360 / 11'10" |
| Min. power required at 540 rpm of pto | kW/hp | 18 / 25 | 21 / 28 | 24 / 32 | 28 / 38 | 32 / 42 | 39 / 50 |
| Number of blades | | 2 | 2 | 3 | 3 | 3 | 4 |
| Total width | cm/inch | 149 / 4'11" | 194 / 6'4" | 224 / 7'4" | 254 / 8'4" | 284 / 9'4" | 374 / 12'3" |
| Cutting height | cm/inch | 4-14 / 1½-5½" | 4-14 / 1½-5½" | 4-14 / 1½-5½" | 4-14 / 1½-5½" | 4-14 / 1½-5½" | 4-14 / 1½-5½" |
| Length of rear roller | cm/inch | 53 / 21" | 53 / 21" | 95 / 37" | 95 / 37" | 95 / 37" | 162 / 64" |
| Max. Offset** ——> | cm inch | - | 140 / 4'7" | 155 / 5'1" | 170 / 5'7" | 185 / 6'1" | 230 / 7'7" |
| *Max. Offset parall.** <——> | cm inch | - | 133 / 4'4" | 148 / 4'10" | 163 / 5'4" | 178 / 5'10" | 223 / 7'4" |
| Weight | kg/lbs | 325 / 715 | 360 / 794 | 430 / 946 | 465 / 1020 | 520 / 1144 | 670 / 1474 |

* Optional ** From centre of tractor

LF with parallelogram-type offset (optional)

## Gear drive rotary mowers • series LK

The rotary mowers series LK have been designed for use in parcels where the grass is cut less frequently.

The cutting blades of these mowers are not driven by V-belts, but directly by the gearboxes.

The flexible rubber shock absorber(s) between the gearboxes and the standard pto shaft with overrunning clutch and overload protection clutch, protect the drive line.

| Technical specifications | | LK-185 | LK-215 | LK-245 | LK-275 |
|---|---|---|---|---|---|
| Cutting width | cm/inch | 185 / 6'1" | 215 / 7'1" | 245 / 8'1" | 275 / 9'0" |
| Min. power required at 540 rpm of pto | kW/hp | 37 / 50 | 41 / 55 | 45 / 60 | 56 / 75 |
| Number of blades | | 2 | 2 | 3 | 3 |
| Total width | cm/inch | 195 / 6'5" | 225 / 7'5" | 255 / 8'4" | 285 / 9'4" |
| Cutting height | cm/inch | 4-14 / 1½-5½" | 4-14 / 1½-5½" | 4-14 / 1½-5½" | 4-14 / 1½-5½" |
| Max. offset from centre of tractor | cm/inch | 141 / 4'7" | 156 / 5'1" | 171 / 5'7" | 186 / 6'1" |
| Weight | kg/lbs | 470 / 1034 | 490 / 1078 | 625 / 1375 | 700 / 1540 |

## *Rotary mowers with swinging arm • series RF*

The labour saving "Perfect" swing arm has been developed to make mowing between and around tree trunks easier whilst avoiding damage to the trees.

When the rubber surround of the swing arm touches the trunk, the wheel rotates and deflects the swinging arm and its cutting blade away from the tree.

As soon as the spring- loaded swinging arm has passed the tree it automatically returns to its original position.

The two front swivel wheels and rear roller give a perfect terrain adjustment.

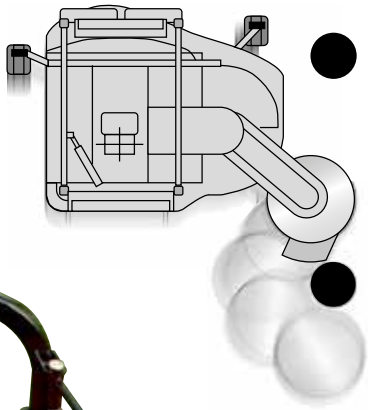

For young trees or when operating on inclines the swinging arm can be provided with a hydraulic feeler mechanism.

A raisable swing arm is available as an option if trees are planted on ridges.

| Technical specifications | RF-220 | RF-270 | RF-300 | RF-325 | RF-340 | RF-365 |
|---|---|---|---|---|---|---|
| Cutting width cm/inch | 220 / 7'3"* | 270 / 8'10"* | 300 / 9'10"* | 325 / 10'8"* | 340 / 11'2"* | 365 / 12'0"* |
| Min. power required at 540 rpm of pto kW/hp | 19 / 26 | 24 / 32 | 27 / 37 | 30 / 41 | 33 / 45 | 37 / 50 |
| Number of blades | 2 + 1 | 3 + 1 | 3 + 1 | 3 + 1 | 4 + 1 | 4 + 1 |
| Diameter blade of swing arm cm/inch | 60 / 23½" | 60 / 23½" | 60 / 23½" | 85 / 33½" | 60 / 23½" | 85 / 33½" |
| Cutting height cm/inch | 4-14 / 1½-5½" | 4-14 / 1½-5½" | 4-14 / 1½-5½" | 4-14 / 1½-5½" | 4-14 / 1½-5½" | 4-14 / 1½-5½" |
| Length of rear roller cm/inch | 53 / 1'9" | 53 / 1'9" | 95 / 3'1" | 95 / 3'1" | 95 / 3'1" | 95 / 3'1" |
| Maximum offset from centre of tractor cm | 215* | 230* | 255* | 280* | 297* | 322* |
| Weight kg/lbs | 495 / 1089 | 570 / 1260 | 610 / 1342 | 675 / 1488 | 715 / 1573 | 730 / 1609 |

* Without swing arm 55 cm =1'10" less RF-325/365 80 cm = 2'8" less

Our RF swing arm models are also very successfully used as fence mowers to cut grass under board fences which are at least 25 cm (10") high, along wire or rock fences and around fence posts.

Their very large offset possibility in combination with the swing arm reasons for the RF's popularity as a mower for mowing grass in between and under solar panels.

The parallelogram headstock with manual, or if desired hydraulic adjustment allows for a very large offset of the machine.

## Trailed rotary mowers with swinging arm • series ZA

For use in orchards where trees are planted at larger distances the ZA series rotary mowers combine a large cutting width and a swinging arm with a large offset possibility by means of a moveable drawbar.

When the rubber surround of the swing arm touches the trunk, the wheel rotates and deflects the swinging arm and its cutting blade away from the tree. As soon as the spring-loaded swinging arm has passed the tree it automatically returns to its original position.

For terrains which are seriously undulating or not level with the central alley, a raisable swing arm is available as an option.

| Technical specifications | | ZA-300 | ZA-340 | ZA-380 |
|---|---|---|---|---|
| Cutting width | cm/inch | 300 / 9'10" | 340 / 11'2" | 380 / 12'6" |
| Min. power required at 540 rpm of pto | kW/hp | 27 / 37 | 33 / 45 | 42 / 55 |
| Number of blades | | 3 + 1 | 4 + 1 | 4 + 1 |
| Diameter blade of swing arm | cm/inch | 60 / 23½" | 60 / 23½" | 60 / 23½" |
| Maximum offset from centre of tractor* | cm/inch | 275 / 9'1" | 330 / 10'10" | 360 / 11'10" |
| Cutting height | cm/inch | 4-20 / 1½-8 | 4-20 / 1½-8 | 4-20 / 1½-8 |
| Weight | kg/lbs | 505 / 1113 | 560 / 1235 | 590 / 1345 |

* Without swing arm: 55 cm/21" less

*Lenghtways transport is standard on the models ZA-340 and ZA-380.*

## Double swing arm mowers • series MD

*Series MD: Two spring loaded swing arms automatically swing around the tree.*

The central section of these specialised mowers are flanked at either side by a 60 cm (23½") diameter swing arm to allow for integral weed control from center row to tree row in one pass.

The swing arms are spring loaded and can be set in different positions to limit the maximum cutting width. At a light touch of the tree the rubber covered swing arm wheel rotates and deflects its cutting blade away from the tree.

Hydraulic rams can be provided to retract the swing arms from the set maximum width while working or raisable swing arms are available as an option.

For young trees or when operating on inclines the swinging arm can be provided with a hydraulic feeler mechanism. A raisable swing arm is available as an option if trees are planted on ridges.

| Technical specifications | | MD-250 | MD-280 | MD-300 | MD-335 | MD-355 | MD-400 |
|---|---|---|---|---|---|---|---|
| Min. cutting width | cm/inch | 160 / 5'3" | 175 / 5'9" | 190 / 6'3" | 225 / 7'5" | 245 / 8'2" | 292 / 9'7" |
| Max. cutting width | cm/inch | 250 / 8'3" | 280 / 9'2" | 300 / 9'10" | 335 / 11'0" | 355 / 11'8" | 400 / 13'1" |
| Min. power required at 540 rpm of pto | kW/hp | 28 / 38 | 29 / 40 | 33 / 45 | 38 / 52 | 40 / 54 | 45 / 62 |
| Number of blades | | 4 | 5 | 5 | 5 | 5 | 5 |
| Total width | cm/inch | 170 / 5'7" | 178 / 5'10" | 193 / 6'4" | 228 / 7'6" | 248 / 8'3" | 300 / 9'10" |
| Cutting height | cm/inch | 4-9 / 1½-3½" | 4-9 / 1½-3½" | 4-9 / 1½-3½" | 4-9 / 1½-3½" | 4-9 / 1½-3½" | 4-9 / 1½-3½" |
| Weight | kg/lbs | 505 / 1111 | 535 / 1175 | 560 / 1232 | 565 / 1243 | 620 / 1365 | 740 / 1625 |

Maximum working speed ± 2½-3 km/h (1½-2 miles/hour).

A raisable swing arm is available as an option if trees are planted on ridges.

Maximum working speed ± 2½-3 km/h (1½-2 miles/hour).

## *Variable width mowers • series DR and MV*

Our "Perfect" DR variable width mowers series consist of a rigid central section with an adjustable wing mounted on either side. The wings are operated by hydraulic rams which move smoothly and independently open and closed, to allow for an easy and exact adjustment of the cutting width in orchards and vineyards with different row spacings.

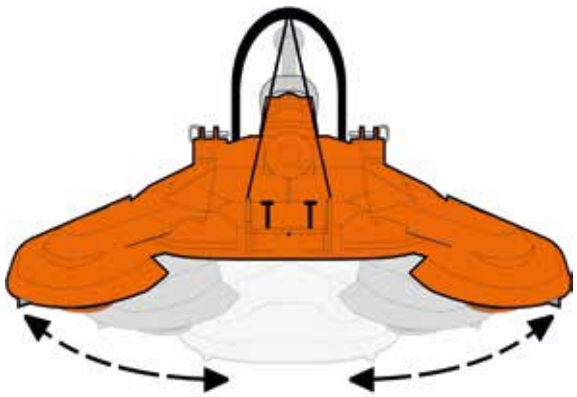

*Series DR: Adjustable working width by means of 2 hydraulic cilinders*

| Technical specifications | | DR-250 | MV-280 | DR-280 | MV-320 | DR-320 | DR-365 | DR-405 | DR-440 | DR-480 | DR-570 |
|---|---|---|---|---|---|---|---|---|---|---|---|
| Min. cutting width | cm/inch | 150 / 4'11" | 190 / 6'3" | 175 / 5'9" | 195 / 6'5" | 190 / 6'3" | 225 / 7'5" | 245 / 8'2" | 290 / 9'6" | 290 / 9'6" | 290 / 9'6" |
| Max. cutting width | cm/inch | 250 / 8'3" | 280 / 9'2" | 280 / 9'2" | 320 / 10'6" | 320 / 10'6" | 365 / 12'0" | 405 / 13'4" | 440 / 14'6" | 480 / 15'9" | 570 / 15'8" |
| Min. power required at 540 rpm of pto | kW/hp | 28 / 38 | 29 / 40 | 29 / 40 | 36 / 50 | 36 / 50 | 40 / 55 | 40 / 55 | 48 / 65 | 50 / 68 | 60 / 82 |
| Number of blades | | 4 | 4 | 5 | 4 | 5 | 5 | 5 | 5 | 5 | 7 |
| Total width | cm/inch | 161 / 5'3" | 193 / 6'4" | 178 / 5'10" | 205 / 6'9" | 193 / 6'4" | 228 / 7'6" | 248 / 8'3" | 300 / 9'10" | 300 / 9'10" | 300 / 9'10" |
| Cutting height | cm/inch | 4-9 / 1½-3½" | 4-9 / 1½-3½" | 4-9 / 1½-3½" | 4-9 / 1½-3½" | 4-9 / 1½-3½" | 4-9 / 1½-3½" | 4-9 / 1½-3½" | 6½-10 / 1 6/10-4" | 6½-10 / 1 6/10-4" | 6½-10 / 1 6/10-4" |
| Weight | kg/lbs | 540 / 1188 | 580 / 1275 | 600 / 1323 | 625 / 1157 | 615 / 1375 | 660 / 1455 | 710 / 1565 | 740 / 1628 | 825 / 1815 | 1100 / 2420 |

Two gearboxes rotating in opposite directions assure an excellent discharge and distribution of the cut material either behind the machine or to the left and right hand side on the tree strips.

The central section has two front swivel wheels and a rear roller, the wing sections have support saucers fitted with bearings.

The larger models DR-440, DR-480 and DR-570 are fitted with full rubber instead of steel wheels. Model DR-570 is also equipped with support wheels on the wings.

There is a small amount of float on the wings to allow for undulating ground. For terrains which are seriously undulating or not level with the central alley, raisable wings are available as an option.

*DR-570*

*DR with parallelogram-type offset (optional). Not possible on DR-570*

## *Linear adjustable rotary mowers • series VT*

Especially designed for orchards and vineyards with different row spacings, our VT series rotary mowers have two main blades the overlap of which can be steplessly adjusted to vary the working width.

The linear width adjustment system in combination with the direct gearbox drive allows for a compact and extra sturdy design.

The model VT-280 is equipped with an extra V-belt driven blade at each side of the main blade. These sides are low and streamlined.

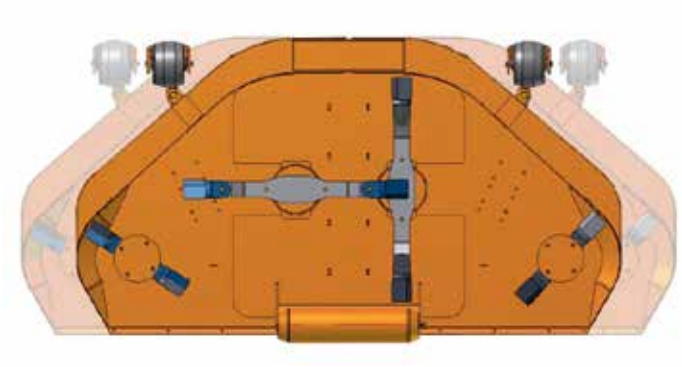

*VT-280*

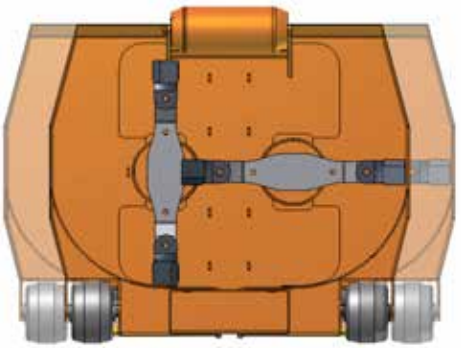

*VT-145/180/225/260*

| Technical specifications | | VT-145 | VT-180 | VT-225 | VT-260 | VT-280 |
|---|---|---|---|---|---|---|
| Cutting width | cm/ft | 115-145 / 3'9"-4'9" | 133-180 / 4'4"-5'11" | 165-225 / 5'5"-8'3" | 190-260 / 6'3"-8'6" | 234-280 / 7'8"-9'2" |
| Min. power required at 540 rpm of pto | kW/hp | 18 / 25 | 25 / 35 | 25 / 35 | 45 / 60 | 56 / 75 |
| Number of blades | | 2 | 2 | 2 | 2 | 4 |
| Total width | cm/ft | 115-145 / 3'10"-4'10" | 136-183 / 4'6"-5'11" | 168-228 / 5'4"-7'5" | 193-263 / 6'4"-8'7" | 236-283 / 7'9"-9'3" |
| Cutting height | cm/inch | 1½-3½" | 1½-3½" | 1½-3½" | 1½-3½" | 1½-3½" |
| Weight | kg/lbs | 450 / 990 | 460 / 1010 | 615 / 1355 | 700 / 1540 | 850 / 1870 |

To ensure long life and minimum maintenance the sliding frame sections are provided with interchangeable wearing plates.

A pto shaft with overrunning clutch and overload protection clutch is standard to protect the driveline.

# PERFECT SWING-AWAY BLADES

**Swing-Away blades**
The generously overlapping cutting blades are made from special alloy spring steel and have double cutting edges for 100% longer life.
*Standard on all models except TKF/TKR and DR/MD-250.*

# ROTARY MOWERS

## *Options • Options • Options • Options • Options*

**Mow-spray combination**
Mowing and spraying at the same time saves time, fuel and labour costs. The unique "Perfect" mow-spray frame has been designed so that both the front and the rear of the mower is able to move independently vertically from the head-stock. This system transmits the full bearing pressure of the sprayer to the tractor 3-point linkage, therefore not charging the mower in any way. The mow-spray combination feature is also available with a disconnectable gearbox to take the drive away from the mower blades, if wanted.
*Option on models T, RN and DR.*

**Front mount mowers**
A front mount mower has the advantage of the grass being cut before the tractor wheels have run over it and it also provides a better view of the work. The cantilever design headstock enables the front linkage mounted version of the "Perfect" mowers to be pulled rather than pushed. This protects the machine and provides a full flotation effect.
*Option on models T, RN, LF and DR. Standard on model TKF.*

**Front and rear**
A double headstock is available for front and rear mount: ideal for use on multiple tractor types. Tractor pto 540 rpm or 1000 rpm as desired.

**Tandem roller**
The tandem rear roller increases the bearing surface and spreads the ground pressure more evenly which gives the machine a smooth run. Especially under humid working conditions and when using a mow-spray combination the tandem roller protects the ground structure.

*Option on series T, RN, LF and DR.*

*Front and rear mount*

**Raisable wings/swing arm(s) (1)**
For working on ground that is seriously undulating or not level with the central alley, raisable wings and swing arms are available as an option. The angle (max. 15°) can be set stepless by means of a spindle. An extra pulley assures a correct tensioning of the V-belt, indepently of the set angle.
*(1) Optional extra on series RF, ZA, MD and DR.*

**Mechanic-hydraulic feeler (2)**
For working with young trees or when operating on inclines we can provide a hydraulic feeler on the swing arm(s).
*(2) Optional extra on series RF, ZA and MD.*

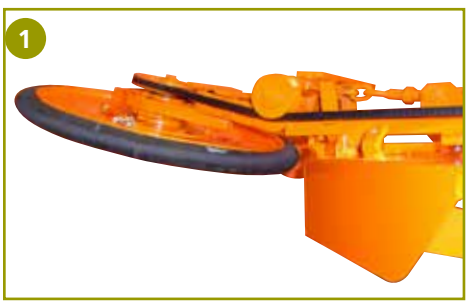


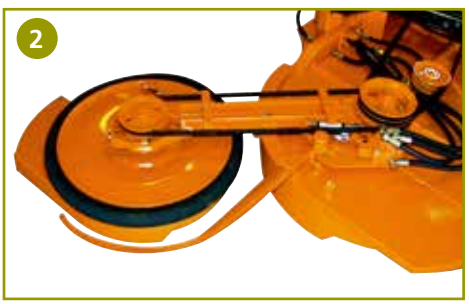

## *Flail choppers • series BG2 and BK2*

Because of their low and compact but heavy construction our Flail Choppers Series BG2 and BK2 are very popular for chopping orchard- and vineyard prunings up to **8 cm (3¹/₈”) diameter**.

They are fitted with a parallelogram-type offset feature as standard. Their profile is very low: the height of the V-belt cover is **only 51 cm (20”).** The flail rotor bearings are mounted inside the frame, which means that the ratio of cutting width to overall width is maximised.

*BG2-180*

| Technical specifications | | | | | | | |
|---|---|---|---|---|---|---|---|
| **BG2 - standard<br>BK2 - with rake tines** | | **BG2-105<br>BK2-105** | **BG2-120<br>BK2-120** | **BG2-135<br>BK2-135** | **BG2-150<br>BK2-150** | **BG2-180<br>BK2-180** | **BG2-210<br>BK2-210** |
| Cutting width | cm/inch | 105 / 3’5” | 120 / 3’11” | 135 / 4’5” | 150 / 4’11” | 180 / 5’11” | 210 / 6’11” |
| PTO speed<br>Flail rotor speed | rpm<br>rpm | 540<br>2100 | 540<br>2100 | 540<br>2100 | 540<br>2100 | 540<br>2100 | 540<br>2100 |
| Min. power* required at 540 rpm<br>• grass cutting etc.<br>• brush chopping etc. | <br>kW/Hp<br>kW/Hp | <br>18 / 25<br>22 / 30 | <br>18 / 25<br>26 / 35 | <br>22 / 27<br>27 / 37 | <br>22 / 30<br>30 / 40 | <br>26 / 35<br>33 / 45 | <br>28 / 38<br>38 / 52 |
| Flails 2,2 kg = 5 lbs (0,8 kg = 1¾ lbs) | | 6 (12) | 8 (12) | 8 (16) | 9 (16) | 12 (20) | 12 (20) |
| Total width | cm/inch | 128 / 4’2” | 143 / 4’8” | 158 / 5’2” | 173 / 5’8” | 203 / 6’8” | 233 / 7’8” |
| Height belt cover | cm/inch | 51½ / 20” | 51½ / 20” | 51½ / 20” | 51½ / 20” | 51½ / 20” | 51½ / 20” |
| Tractor 3 pt. linkage | cat. | I + II | I + II | I + II | I + II | I + II | I + II |
| Maximum offset from centre of tractor | cm/inch | 62 / 2’2” | 80 / 2’7” | 95 / 3’1” | 110 / 3’7” | 140 / 4’7” | 170 / 5’7” |
| Weight BG2 | kg/lbs | 480 / 1058 | 510 / 1124 | 525 / 1157 | 550 / 1212 | 640 / 1411 | 725 / 1595 |
| Weight BK2 | kg/lbs | 500 / 1100 | 535 / 1177 | 550 / 1210 | 590 / 1298 | 665 / 1463 | 800 / 1760 |
| Number of rake tines BK2 | | 8 | 9 | 9 | 11 | 13 | 15 |

* Power requirements depend entirely on the type of work

The gearbox with spiral toothed gears and the V-belts with a springloaded automatic belt tensioner assure an indirect flexible drive with maximum security and minimum maintenance. A full width rear roller with conical ends and skids at both sides provides excellent stability and easy handling.

*For a better pick-up and pulverization of thin prunings or prunings that are laying flat, our flail choppers **Series BK2** are delivered as standard with rake tines which are adjustable in height.*

*BK2*

## *Options • Options • Options • Options • Options • Options • Options*

**Front mounted flail choppers**
A front mounted flail chopper can more easily deal with larger quantities of prunings because the tractor has not run over the prunings before chopping them. Either the unique cantilever design of the headstock enables the front mounted version of the “Perfect” flail chopper to be pulled rather than pushed. This protects the machine and provides a full floatation effect. By reversing the headstock our front mount models can also be used as rear mounted machines. Available for either 540 rpm or 1000 rpm of pto.

*Option on models: BG2 / BK2 and KG / KK*

*BK2-150 Front mount*

## *Heavy-Duty flail choppers • series KG and KK*

The "Perfect" flail chopper line also includes four larger capacity machines in cutting widths from 150 cm (4'11") to 245 cm (8'1"), which are designed to deal with heavier working conditions, not only for chopping prunings up to 10 cm (4") diameter but also for other vegetation residues such as corn stalks etc.

Because of the bigger size reinforced flail rotor and gearbox the V-belt cover on these machines is some-what higher, measuring 72 cm (28") on the KG/KK-150/180/220 and 77 cm (30") on the KG/KK-245HD.

*Our heavy-duty flail choppers **series KK** are delivered with an adjustable rear opening cover and with optional rake tines.*

The KG/KK-245HD chopper has a heavier frame, a heavy-duty pto shaft and gearbox as well as a flail rotor and rear roller of increased diameter.

| Technical specifications | | | | | |
|---|---|---|---|---|---|
| **KG - standard<br>KK - with rear rake tines possibility** | | **KG-150<br>KK-150** | **KG-180<br>KK-180** | **KG-220<br>KK-220** | **KG-245HD<br>KK-245HD** |
| Cutting width | cm/inch | 150 / 4'11" | 180 / 5'11" | 220 / 7'3" | 245 / 8'1" |
| PTO speed<br>Flail rotor speed | rpm<br>rpm | 540<br>2100 | 540<br>2100 | 540<br>2100 | 540<br>2100 |
| Min. power* required at 540 rpm<br>• grass cutting etc.<br>• brush chopping etc. | <br>kW/hp<br>kW/hp | <br>24 / 33<br>30 / 42 | <br>26 / 35<br>33 / 45 | <br>30 / 40<br>44 / 60 | <br>44 / 60<br>58 / 80 |
| Flails 2,2 kg = 5 lbs (0,8 kg = 1¾ lbs) | | 9 (16) | 12 (18) | 12 (22) | 16 |
| Total width | cm/inch | 171 / 5'7" | 206 / 6'9" | 246 / 8'1" | 275 / 9'0" |
| Height belt cover | cm/inch | 72 / 28" | 72 / 28" | 72 / 28" | 77 / 30" |
| Tractor 3 pt. linkage | cat. | I + II | I + II | I + II | I + II |
| Maximum offset<br>from centre of tractor | cm/inch | 112 / 3'8" | 142 / 4'8" | 182 / 6'0" | 181 / 5'11" |
| Weight KG/KK | kg/lbs | 750/770<br>1575/1615 | 780/815<br>1543/1793 | 795/865<br>1685/1860 | 990/1035<br>2178/2277 |
| Number of rake tines<br>(optional on KK) | | 11 | 13 | 14 | 16 |

* Power requirements depend entirely on the type of work

## *Options • Options • Options • Options • Options • Options • Options*

**Wearing plate (A)**
For extreme conditions an extra wearing plate (A) is available which is welded to the inside of the frame.

*Option on models: BG2 / BK2, BGM / BKM and KG / KK*

**Improved leaf chopping (B)**
To counter the increasing scab problems an optional plate is available which can be bolted to the inside of the flail chopper (B) when chopping leafs. As a result of this the material is even further minimized before it leaves the machine.

*Option on models: BG2 / BK2, BGM / BKM and KG / KK*

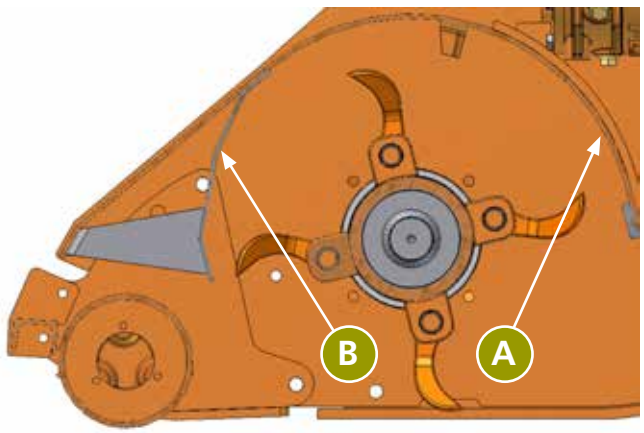

# *Front and rear mounted flail choppers • series BGM and BKM*

*Front mount*

The heavily constructed flail chopper series BGM and BKM have especially been designed for use by customers disposing of different tractors to drive.

The special headstock allows for use as front and as rear mounted models without any transformation.

The standard configuration also includes a hydraulic offset feature and a universal gearbox with integrated overrunning clutch that accepts any direction of rotation.

The BKM models are equipped with rake tines.

*Rear mount*

| Technical specifications | | | | |
|---|---|---|---|---|
| **BGM - standard<br>BKM - with rake tines** | | **BGM-150<br>BKM-150** | **BGM-180<br>BKM-180** | **BGM-210<br>BKM-210** |
| Cutting width | cm/inch | 150 / 4'11" | 180 / 5'11" | 210 / 6'11" |
| Min. power* required at 540 rpm | kW/hp | 30 / 40 | 33 / 45 | 38 / 52 |
| Maximum offset from centre of tractor | cm/inch | 99 / 3'3" | 129 / 4'3" | 159 / 5'3" |
| Flails 2,2 kg = 5 lbs (0,8 kg = 1¾ lbs) | | 9 (16) | 12 (20) | 12 (20) |
| Overall width | cm/inch | 173 / 5'8" | 203 / 6'8" | 233 / 7'8" |
| Weight BGM | kg/lbs | 700 / 1540 | 740 / 1630 | 810 / 1786 |
| Weight BKM | kg/lbs | 735 / 1620 | 780 / 1720 | 855 / 1885 |
| Number of rake tines BKM | | 11 | 13 | 15 |

* Power requirements depend entirely on the type of work

## Variable width flail chopper • Model NX-460

*Flail mowers for grass and prunings up to 8 cm (3 1/8") diameter.*

Our NX-460 variable width flail chopper consists of a trailed frame section which holds two flail choppers with a working width of 240 cm (7'11") each.

By means of hydraulic cylinders the overlap between the two units can be varied, resulting in an easy and exact adjustment of the cutting width, for example in orchards with different row spacings. The total working width is adjustable from 290 cm (8'3") to 460 cm (15'1").

To achieve an excellent ground contour adaptation the flail choppers are attached to the frame by means of a flexible construction and equipped with a full width rear roller.

| Technical specifications | | NX-460 |
|---|---|---|
| Working width min. | cm/inch | 290 / 9'6" |
| Working width max. | cm/inch | 460 / 15'1" |
| Flail rotor speed | rpm | 2100 |
| Power requirement (at 540 rpm), min. | kW/hp | 81 / 105 |
| Flails 2,2 kg = 5 lbs (0,8 kg = 1¾ lbs) | | 32 (48) |
| Cutting height | cm/inch | 4-10 / 1½-4" |
| Tractor hydraulics required | | 3 x double acting valve |
| Wheels | size | ø 515 mm B = 250 mm |
| Weight | kg/lbs | 2100 / 4620 |

## Options • Options • Options • Options • Options • Options • Options

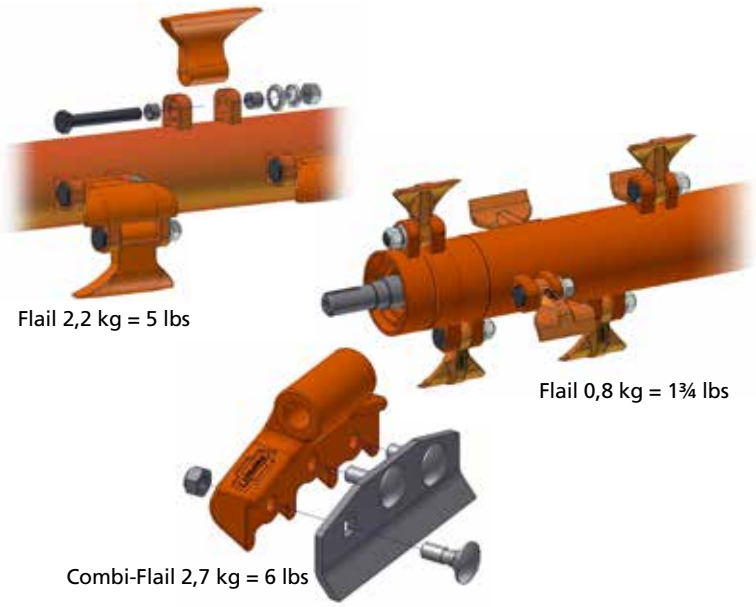


**Flails**

The 2,2 kg (5 lbs) heavy-duty "Perfect" flails are especially designed for pulverizing prunings. They are fitted to the electronically balanced vibration-free flail rotor with heavy bolts and replaceable steel bushings and provide an excellent pulverization. No further work is necessary to collect or remove the cut material.

Optional flails of 0,8 kg (1¾ lbs) are available for grass cutting and light chopping work (vineyard prunings, leaves etc.).

Upon request all Perfect flail choppers can also be equipped with our Combi-Flails. These extra heavy flails (2,7 kg / 6 lbs) come with a replaceable chopper blade out of special steel. This results in a high impact in combination with a continuously sharp cutting edge. Combi-flails are especially suited for chopping prunings, but also very suited for a continuous clean and neat cut in grass. Further they are the best choice when it comes to chopping leaves, green manures or other vegetation residues.

# SOLO-SWING SWING ARM MOWERS

## Solo Swing attachment • model SZA

SZA-850

The Solo-Swing is a swinging arm, driven by a hydraulic motor. It's simple but robust construction allows to automatically mow around trees, fences, posts etc.

The SZA is an attachment model which can be supplied with mounting brackets to be fitted to a rotary mower or a flail mower.

Swing-away blades which give additional protection in rough or stony conditions are standard on all Solo-Swing models.

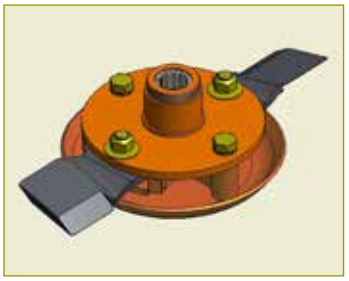

| Technical specifications | | SZA-500 | SZA-600 | SZA-850 |
|---|---|---|---|---|
| Cutting width | cm/ft | 50 / 1'8" | 60 / 2'0" | 85 / 2'9½" |
| Oil flow requirements | l/min. | 30 | 30 | 30 |
| Oil pressure requirements (average, depending on kind of work) | bar/psi | ±65 / 940 | ±80 / 1160 | ±125 / 1810 |
| Displacement of motor | cc/cu.in | 16 / 1 | 16 / 1 | 17,9 / 1,1 |
| Cutting angle | ° | 0-15 | 0-15 | 0-15 |
| Discharge angle | ° | 0-15 | 0-15 | 0-15 |
| Tractor hydraulics required | | 1 x double acting valve, 1 x free flow return | 1 x double acting valve, 1 x free flow return | 1 x double acting valve, 1 x free flow return |
| Weight | kg/lbs | 85 / 187 | 95 / 210 | 110 / 242 |

SZA-600
with headstock for loader

SZA-600

## Front mount model • Series SZF/L

SZL-600

| Technical specifications | | SZF-600 | SZL-600 |
|---|---|---|---|
| Cutting width | cm/ft | 60 / 2'0" | 60 / 2'0" |
| Oil flow requirements | l/min. | 30 | 30 |
| Oil pressure requirements (average, depending on kind of work) | bar/psi | ±80 / 1160 | ±80 / 1160 |
| Displacement of motor | cc/cu.in | 16 / 1 | 16 / 1 |
| Cutting angle | ° | 0-15 | 0-15 |
| Discharge angle | ° | 0-15 | 0-15 |
| Tractor hydraulics required | | 2 x double acting valves, 1 x free flow return | 2 x double acting valves, 1 x free flow return |
| Max. offset from tractor centreline | cm/ft | 165 / 5'5" | 210 / 6'11" |
| Weight | kg/lbs | 175 / 385 | 200 / 440 |

The standard configuration of the SZF/SZL models is a tractor front mount version with hydraulic offset and two support wheels. Cutting width 60 cm / 2'0". The Solo-Swing comes automatically in transport position as soon as the swing arm is being retracted completely. A 3-point front linkage is not necessary for use of the SZF/SZL models.

**SZF-600:** for narrow tractors, offset max. 165 cm / 5'5"
**SZL-600:** for traditional tractors, offset max. 210 cm /6'11"

SZL-600

# SOLO-SWING SWING ARM MOWERS

## *Frontmodel • model SZX-850*

| Technical specifications | | SZX-850 |
|---|---|---|
| Cutting width | cm/ft | 85 / 2'9½" |
| Oil flow requirements | l/min. | 30 |
| Oil pressure requirements (average, depending on kind of work) | bar/psi | ±120 / 1810 |
| Displacement of motor | cc/cu.in | 17,9 / 1,1 |
| Cutting angle | ° | 0-15 |
| Discharge angle | ° | 0-15 |
| Tractor hydraulics required | | 2 x double acting valves, 1 x free flow return |
| Max. offset from tractor centreline | cm/ft | 245 / 8'0" |
| Weight | kg/lbs | 275 / 605 |

The **SZX-850** model has a 85 cm swing arm and is especially designed for attachment to the tractor 3-point linkage. The standard configuration includes a hydraulic offset feature, two support wheels and a headstock for front linkage.

## *3-pt. Model • model SZS-600*

Model for tractor 3-pt. model.

Model SZS-600 comes in standard with a hydraulic linear offset system and a headstock for mounting in the tractor 3-pt. For best ground contour adaptation we mount a set of tandem wheels.

| Technical specifications | | SZS-600 |
|---|---|---|
| Cutting width | cm/ft | 60 / 2'0" |
| Oil flow requirements | l/min. | 30 |
| Oil pressure requirements (average, depending on kind of work) | bar/psi | ±80 / 1160 |
| Displacement of motor | cc/cu.in | 16 / 1 |
| Cutting angle | ° | 0-15 |
| Discharge angle | ° | 0-15 |
| Tractor hydraulics required | | 2 x double acting valves, 1 x free flow return |
| Max. offset from tractor centreline | cm/ft | 210 / 6'11" |
| Weight | kg/lbs | 175 / 385 |

*SZS-600*

## *Mechanic-hydraulic feeler*

For young trees, lighter posts, or when operating on inclines all "Perfect" Solo-Swing models can be provided with a hydraulic feeler mechanism.

## Brush sweeper • Attachment (SPA) front mount (SPF)

"Perfect" brush sweepers are designed to remove the prunings and leaf residues which are in the tree or vine rows and to clean the herbicided strips in order to discourage the development of fungus and to implement optimal chemical weed control.

They are driven by a hydraulic motor and are equipped with elastic and highly resistant sweeper brushes which spin at approximately 150 rpm.

The sweeper head position is adjustable both in working angle and in working height, which assures a high quality working result in all conditions. For perfect terrain adjustment the sweeper head is supported by a swivel wheel. In transport position the brush sweeper can be lifted manually or by means of a hydraulic ram.

| Technical specifications | | SPA | SPF |
|---|---|---|---|
| Sweeper width | cm/inch | 100 / 3'3" | 100 / 3'3" |
| Oil flow | l/min. | 30 | 30 |
| Oil pressure | bar/psi | ±70 / 1015 | ±70 / 1015 |
| Necessary hydraulic couplings on the tractor | | 1 x double acting or 1 x single acting and 1 x free flow return | 1 x double acting or 1 x single acting and 1 x free flow return |

## Double brush sweeper • SPDF

All brush sweepers can also be equiped with special vineyard brushes (ø 58 cm/1'1") or rubber flaps.

| Technical specifications | | SPDF |
|---|---|---|
| Sweeper width | cm/inch | 2 x 100 / 3'3" |
| Oil flow | l/min. | 30 |
| Oil pressure | bar/psi | ±70 / 1015 |
| Necessary hydraulic couplings on the tractor | | 4 x double acting or 3x double acting, 1 x single acting and 1 x free flow return |

A double brush sweeper clears the two free rows in one pass from leaves, prunings etc. The working width is adjustable up to 400 cm (13'1").
The double front mounted brush sweeper (SPDF) is equipped with a carriage beam for mounting to the front of the tractor and the standard configuration the machine is equipped with hydraulic rams to adjust the working width and to lift the sweepers.
Optionally it can be equiped with a headstock for both front as well as rear tractor mount.

Dealer:

# VAN WAMEL B.V.

PERFECT

www.vanwamel.nl

Energieweg 1 - P.O. Box 4
6658 ZG Beneden-Leeuwen
HOLLAND
Tel. +31 (0)487 592944
Fax +31 (0)487 592970
E-mail perfect@vanwamel.nl

170501

As our policy is one of continuous improvement, we reserve the right to change the specification or to modify the design without prior notice.